DMG.NO.	24000GA~E-014CFR	개정(REV.)	000

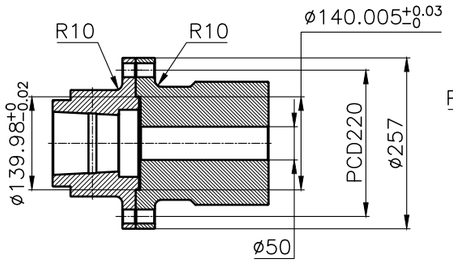

OUTPUT SHAFT COUPLING & PROPELLER COUPLING DIMENSION

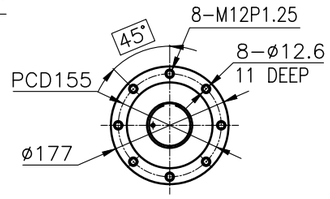

INPUT COUPLING DIMENSION

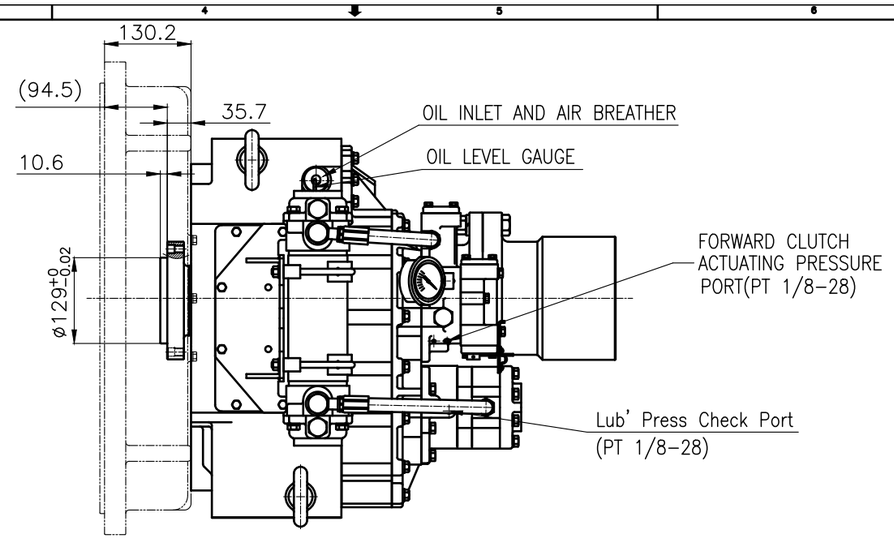

DMT240H MARINE TRANSMISSION SPECIFICATION		
GEAR RATIO	1.50 , 1.97 , 2.44 , 2.93 , 3.40	
TOTAL WEIGHT	APPROX. 400 Kg(DRY)	
OIL CAPACITY	APPROX. 8L	
OIL VISCOSITY	SAE # 30	
OIL PRESSURE	1.96 ~ 2.54 MPa	CLUTCH OIL
DIRECTION OF ROTATION IN FORWARD	INPUT	C.C.W VIEWED FROM THE STERN
	OUTPUT	C.W VIEWED FROM THE STERN
OIL CHANGE INTERVAL	THE FIRST 100HOURS OF INITIAL OPERATION	
	AND EVERY 1000HOURS THEREAFTER	
SHIFTING LIMIT	UNDER 50% OF THE RATED ENGINE SPEED	
OIL COOLER	WATER FLOW 40 ~ 60 L/m	
	TEMPERATURE OF COOLING WATER	MAX 32°C
OPERATING TORQUE OF SHIFTING LEVER		UNDER 2.94Nm

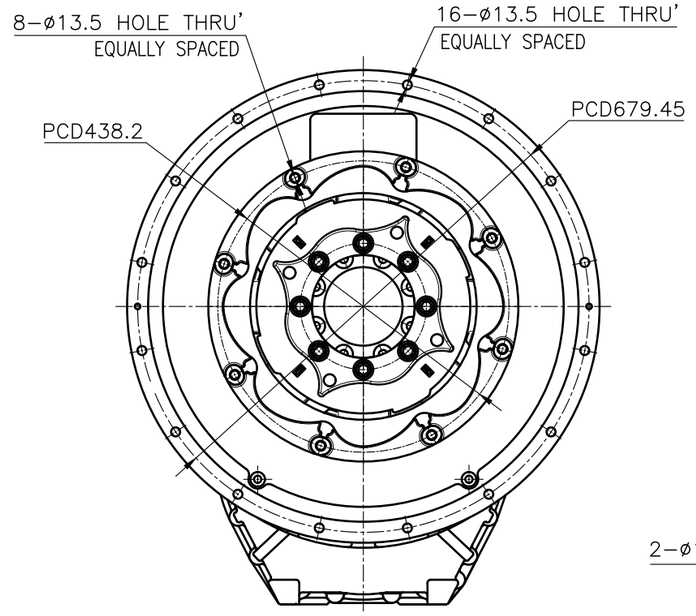

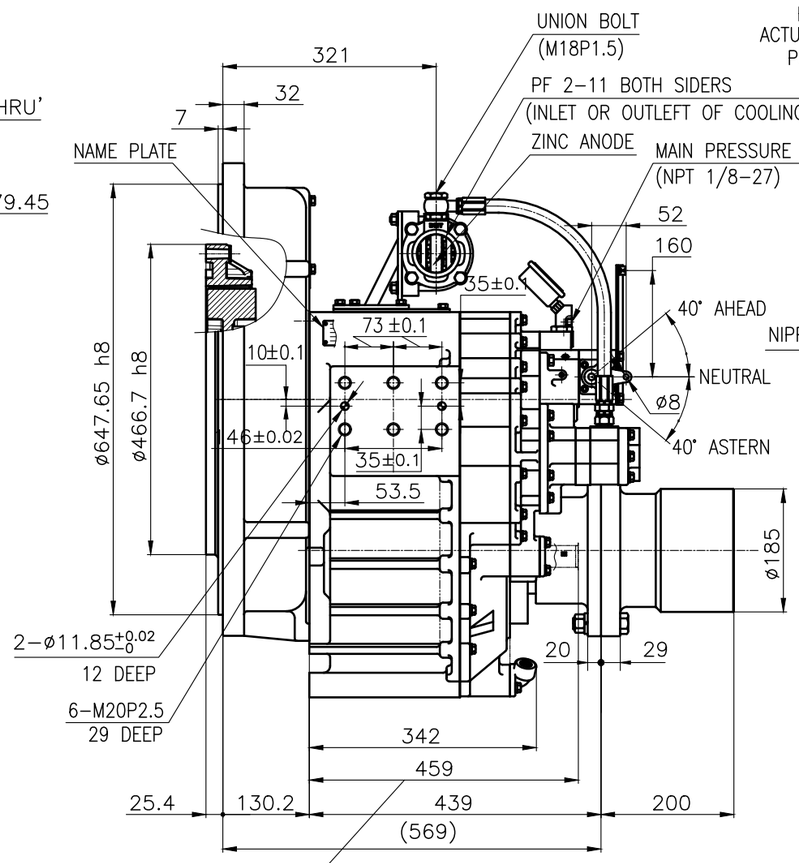

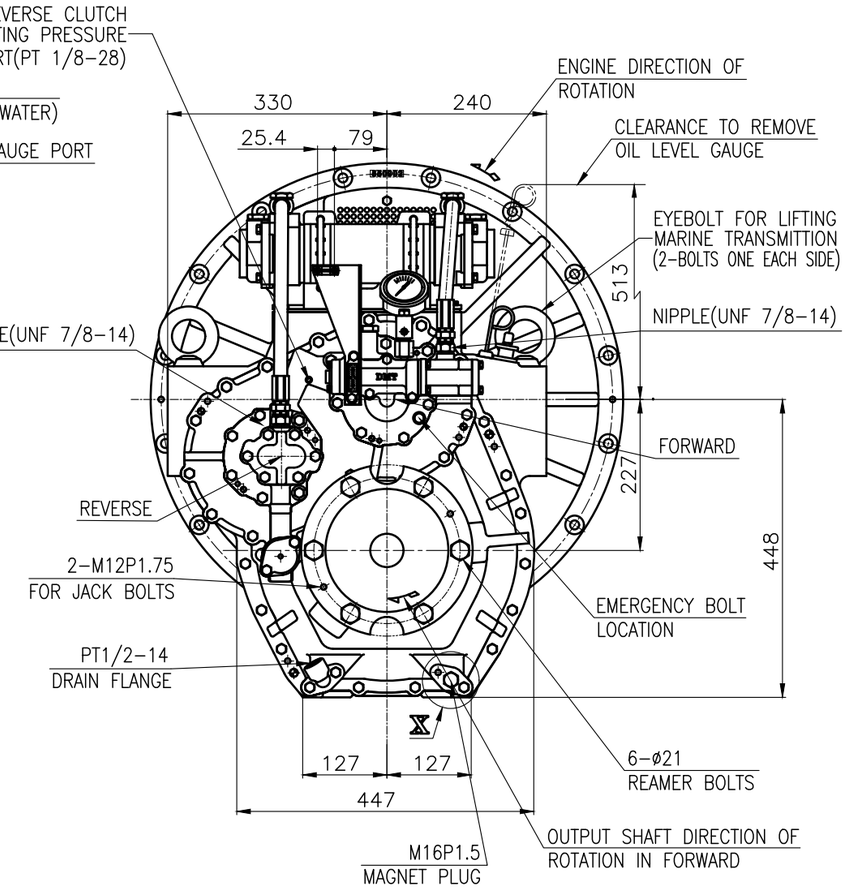

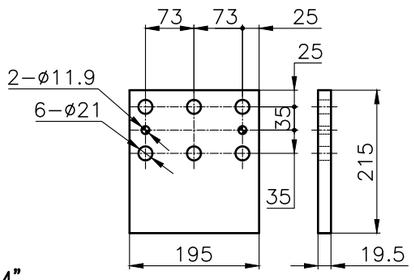

BRACKET DIMENSION

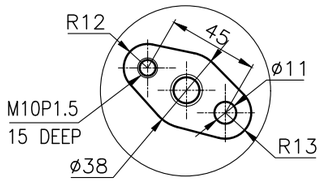

"X" detail(3/1)

REMARK
1.HOUSING: SAE#0
2.DRIVING RING: SAE 14"
3.COUPLING TYPE
−CENTA Flex Coupling : 77268803

공통공차 TOLERANCE ON		
분수 FRACTIONS	소수 DECIMALS	각도 ANGLES
± —	± —	± —

절삭가공 일반차			
구분	조급	중급	정급
1 초과 4 이하	± 0.3	± 0.1	± 0.05
4 16	± 0.5	± 0.2	± 0.07
16 63	± 0.7	± 0.3	± 0.1
63 250	± 1.2	± 0.5	± 0.2
250 1000	± 2.0	± 0.8	± 0.3

번호 NO.	품번 PART NO.	품명 PART NAME	개수 Q'TY	재질 MATERIAL	규격 SIZE	비고 REMARKS

재질 MATERIAL	—		
	작성 DATE 2018.06.29	척도 SCALE 1/1	
승인 APPROVED BY	검도 CHECKED BY	제도 DRAWN	설계 DESIGNED
JK.Kim	TH.Cha	CH.Baek	

형식 TYPE	DMT240H	원도번 ORIGINAL DWG. NO.	
품명 NAME	MARINE TRANSMISSION		
도번 DWG. NO.	24000GA~E-014CFR	개정(REV.)	000
크기 SIZE	A3	코드번호 CODE ID. NO.	

D-I INDUSTRIAL

SHEET 1 OF 1

듀이기술-DN4(841x594)